Linear carriage SHS-45 THK

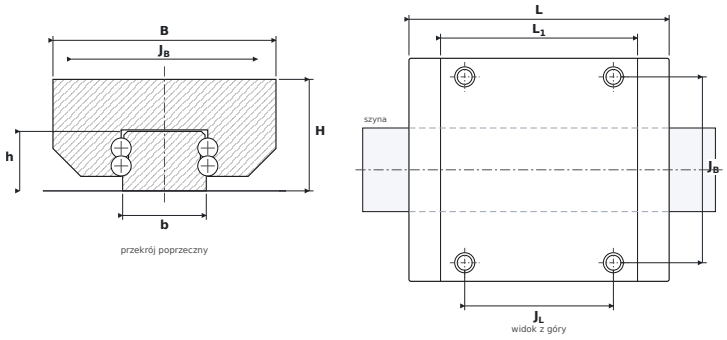

DIMENSIONS

B	carriage width	**120 mm**
H	overall height (carriage on rail)	**60 mm**
L	overall carriage length	**140 mm**
L1	body length (without end seals)	**106 mm**
JB	mounting hole spacing — across	**100 mm**
JL	corner hole spacing — along	**80 mm**
b	rail width	**45 mm**
h	rail height	**32 mm**

SPECIFICATIONS

Manufacturer	**THK**
Manufacturer designation	**SHS-45**
Basic dynamic load rating C	**82.8 kN**
Basic static load rating C0	**126 kN**
Mass	**3.24 kg**