# Linear carriage SHS-65 THK

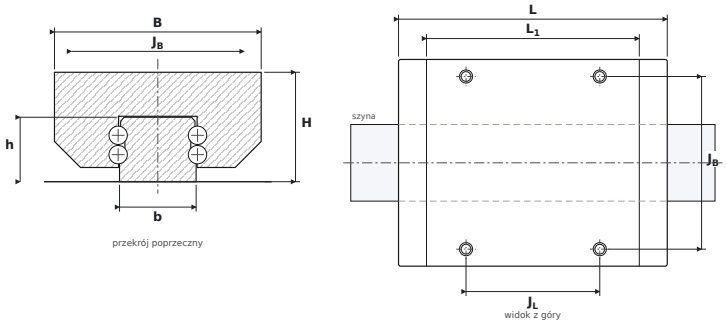


## DIMENSIONS

| | | |
|---|---|---|
| **B** | carriage width | **170 mm** |
| **H** | overall height (carriage on rail) | **90 mm** |
| **L** | overall carriage length | **221 mm** |
| **L1** | body length (without end seals) | **175 mm** |
| **JB** | mounting hole spacing — across | **142 mm** |
| **JL** | corner hole spacing — along | **110 mm** |
| **b** | rail width | **63 mm** |
| **h** | rail height | **53 mm** |

## SPECIFICATIONS

| | |
|---|---|
| Manufacturer | **THK** |
| Manufacturer designation | **SHS-65** |
| Basic dynamic load rating C | **205 kN** |
| Basic static load rating C0 | **320 kN** |
| Mass | **10.7 kg** |