Linear carriage SHW-35 THK

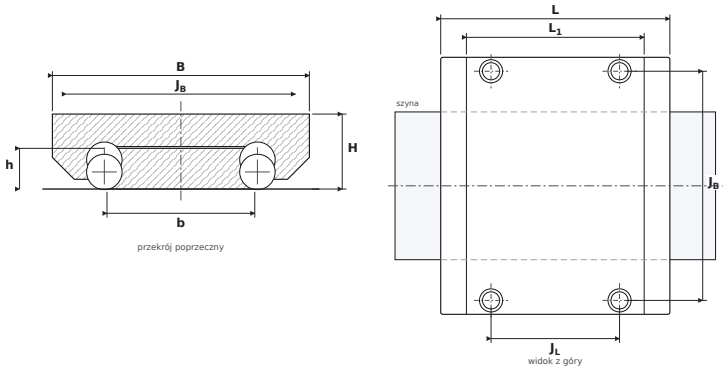

DIMENSIONS

B	carriage width	**120 mm**
H	overall height (carriage on rail)	**35 mm**
L	overall carriage length	**107 mm**
L1	body length (without end seals)	**83 mm**
JB	mounting hole spacing — across	**107 mm**
JL	corner hole spacing — along	**60 mm**
b	rail width	**69 mm**
h	rail height	**19 mm**

SPECIFICATIONS

Manufacturer	**THK**
Manufacturer designation	**SHW-35**
Basic dynamic load rating C	**35.5 kN**
Basic static load rating C0	**49.2 kN**
Mass	**1.4 kg**