Linear carriage SR-25 Y THK

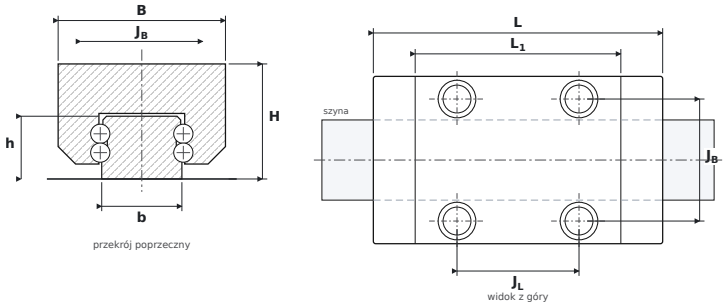

DIMENSIONS

B	carriage width	**48 mm**
H	overall height (carriage on rail)	**33 mm**
L	overall carriage length	**83 mm**
L1	body length (without end seals)	**59 mm**
JB	mounting hole spacing — across	**35 mm**
JL	corner hole spacing — along	**35 mm**
b	rail width	**23 mm**
h	rail height	**18 mm**

SPECIFICATIONS

Manufacturer	**THK**
Manufacturer designation	**SR-25 Y**
Basic dynamic load rating C	**20.3 kN**
Basic static load rating C0	**39.5 kN**
Mass	**0.4 kg**