Linear carriage SRS-12 W THK

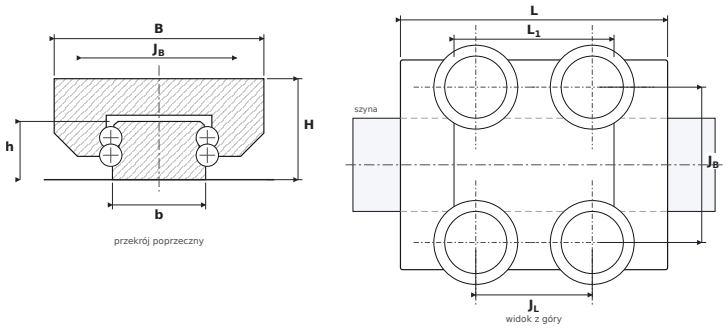

DIMENSIONS

B	carriage width	**27 mm**
H	overall height (carriage on rail)	**13 mm**
L	overall carriage length	**34.4 mm**
L1	body length (without end seals)	**20.6 mm**
JB	mounting hole spacing — across	**20 mm**
JL	corner hole spacing — along	**15 mm**
b	rail width	**12 mm**
h	rail height	**7.5 mm**

SPECIFICATIONS

Manufacturer	**THK**
Manufacturer designation	**SRS-12 W**
Basic dynamic load rating C	**4 kN**
Basic static load rating C0	**3.53 kN**
Mass	**0.027 kg**