Linear carriage SRS-15 W THK

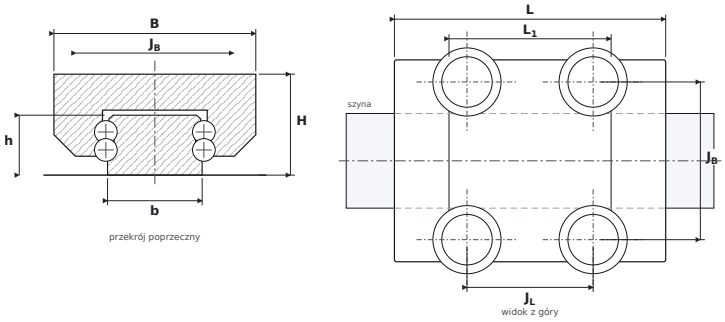

DIMENSIONS

B	carriage width	**32 mm**
H	overall height (carriage on rail)	**16 mm**
L	overall carriage length	**43 mm**
L1	body length (without end seals)	**25.7 mm**
JB	mounting hole spacing — across	**25 mm**
JL	corner hole spacing — along	**20 mm**
b	rail width	**15 mm**
h	rail height	**9.5 mm**

SPECIFICATIONS

Manufacturer	**THK**
Manufacturer designation	**SRS-15 W**
Basic dynamic load rating C	**6.66 kN**
Basic static load rating C0	**5.7 kN**
Mass	**0.047 kg**