Linear carriage SRS-9 W THK

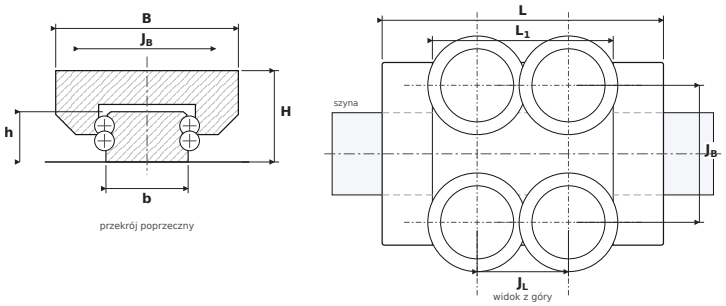

DIMENSIONS

B	carriage width	**20 mm**
H	overall height (carriage on rail)	**10 mm**
L	overall carriage length	**30.8 mm**
L1	body length (without end seals)	**19.8 mm**
JB	mounting hole spacing — across	**15 mm**
JL	corner hole spacing — along	**10 mm**
b	rail width	**9 mm**
h	rail height	**5.5 mm**

SPECIFICATIONS

Manufacturer	**THK**
Manufacturer designation	**SRS-9 W**
Basic dynamic load rating C	**2.69 kN**
Basic static load rating C0	**2.31 kN**
Mass	**0.016 kg**