Spindle bearing 70UHC45 A15.0/IL UKF

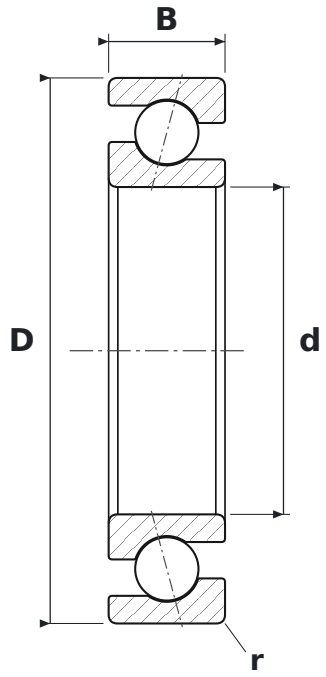

DIMENSIONS

d	bore diameter	**45 mm**
D	outside diameter	**75 mm**
B	width	**16 mm**
r	chamfer dimension (min.)	**1.3 mm**

SPECIFICATIONS

Manufacturer	**UKF**
Manufacturer designation	**70UHC45 A15.0/IL**
r min – chamfer dimension	**1.3 mm**
Rolling elements	**single-row ball bearing**
Contact angle	**15°**
Features	**Light preload (L)**
Basic dynamic load rating C	**10.16 kN**
Basic static load rating C0	**8.46 kN**
Limiting speed	**32,960 r/min**
Mass	**0.24 kg**