Spindle bearing 70USO40 A21.0/IM M UKF

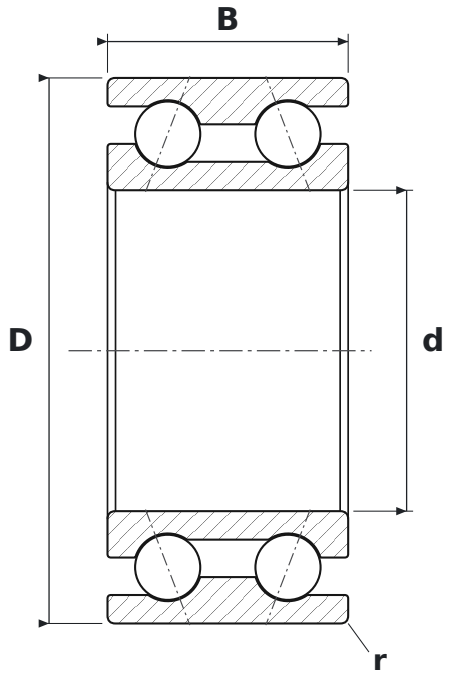

DIMENSIONS

d	bore diameter	**40 mm**
D	outside diameter	**68 mm**
B	width	**30 mm**
r	chamfer dimension (min.)	**1 mm**

SPECIFICATIONS

Manufacturer	**UKF**
Manufacturer designation	**70USO40 A21.0/IM M**
r min – chamfer dimension	**1 mm**
Rolling elements	**double-row ball bearing**
Contact angle	**21°**
Features	**Medium preload (M)**
Basic dynamic load rating C	**33.1 kN**
Basic static load rating C0	**27.4 kN**
Limiting speed	**16,000 r/min**
Mass	**0.36 kg**