CASTOMER

DATASHEET

Spindle bearing 70USO70 A21.0/IM UKF

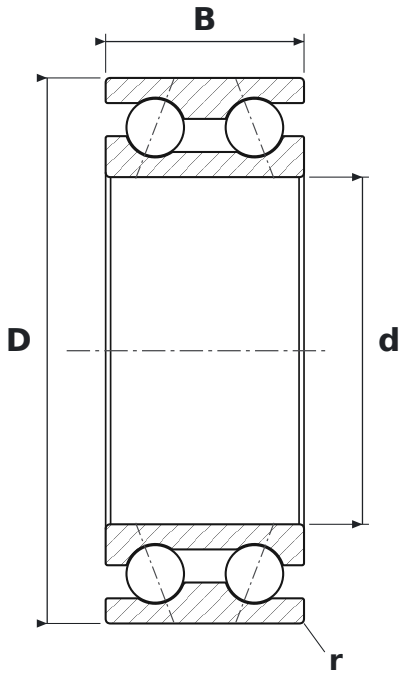

DIMENSIONS

d	bore diameter	**70 mm**
D	outside diameter	**110 mm**
B	width	**40 mm**
r	chamfer dimension (min.)	**1 mm**

SPECIFICATIONS

Manufacturer	**UKF**
Manufacturer designation	**70USO70 A21.0/IM**
r min – chamfer dimension	**1 mm**
Rolling elements	**double-row ball bearing**
Contact angle	**21°**
Features	**Medium preload (M)**
Basic dynamic load rating C	**77.4 kN**
Basic static load rating C0	**76.2 kN**
Limiting speed	**9,500 r/min**
Mass	**1.2 kg**