Spindle bearing 70USO75 A21.I/1L UKF

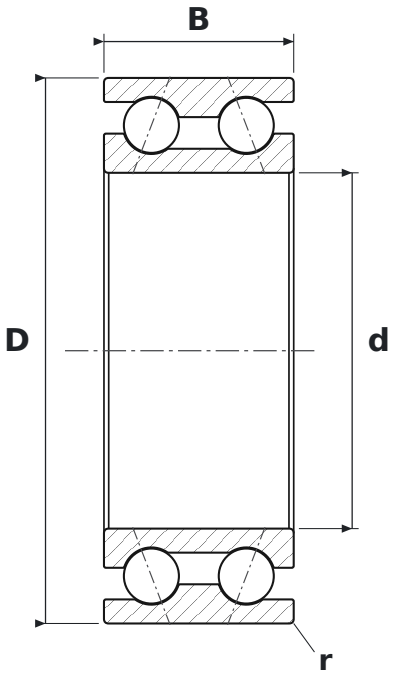

DIMENSIONS

d	bore diameter	**75 mm**
D	outside diameter	**115 mm**
B	width	**40 mm**
r	chamfer dimension (min.)	**1 mm**

SPECIFICATIONS

Manufacturer	**UKF**
Manufacturer designation	**70USO75 A21.I/1L**
r min – chamfer dimension	**1 mm**
Rolling elements	**double-row ball bearing**
Contact angle	**21°**
Features	**Light preload (L)**
Basic dynamic load rating C	**79.7 kN**
Basic static load rating C0	**81.2 kN**
Limiting speed	**9,000 r/min**
Mass	**1.35 kg**