Spindle bearing 70USO85 A21.I/IS UKF

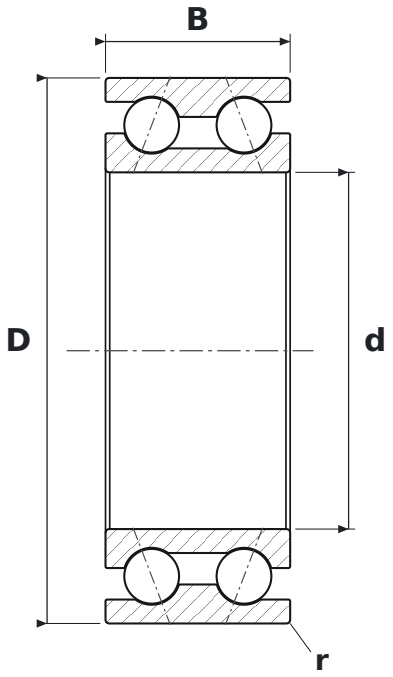

DIMENSIONS

d	bore diameter	**85 mm**
D	outside diameter	**130 mm**
B	width	**44 mm**
r	chamfer dimension (min.)	**1 mm**

SPECIFICATIONS

Manufacturer	**UKF**
Manufacturer designation	**70USO85 A21.I/IS**
r min – chamfer dimension	**1 mm**
Rolling elements	**double-row ball bearing**
Contact angle	**21°**
Features	**Heavy preload (S)**
Basic dynamic load rating C	**102.2 kN**
Basic static load rating C0	**115 kN**
Limiting speed	**8,000 r/min**
Mass	**1.8 kg**