Spindle bearing 70USS20 A21.0/IM UKF

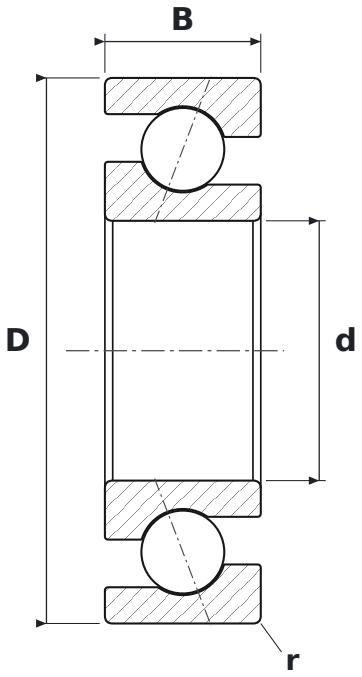

DIMENSIONS

d	bore diameter	**20 mm**
D	outside diameter	**42 mm**
B	width	**12 mm**
r	chamfer dimension (min.)	**0.6 mm**

SPECIFICATIONS

Manufacturer	**UKF**
Manufacturer designation	**70USS20 A21.0/IM**
r min – chamfer dimension	**0.6 mm**
Rolling elements	**single-row ball bearing**
Contact angle	**21°**
Features	**Medium preload (M)**
Basic dynamic load rating C	**10.8 kN**
Basic static load rating C0	**6.4 kN**
Limiting speed	**30,000 r/min**
Mass	**0.07 kg**