Spindle bearing 70USS30 A21.I/1M UKF

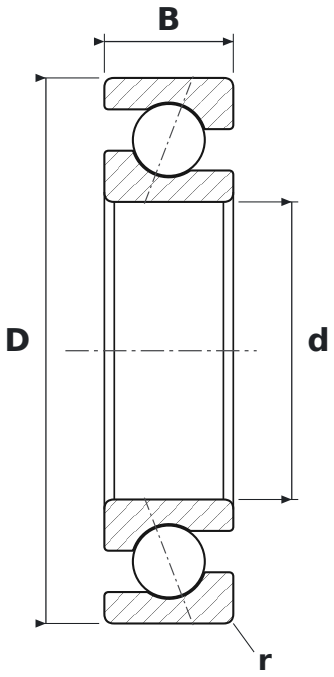

DIMENSIONS

d	bore diameter	**30 mm**
D	outside diameter	**55 mm**
B	width	**13 mm**
r	chamfer dimension (min.)	**1 mm**

SPECIFICATIONS

Manufacturer	**UKF**
Manufacturer designation	**70USS30 A21.I/1M**
r min – chamfer dimension	**1 mm**
Rolling elements	**single-row ball bearing**
Contact angle	**21°**
Features	**Medium preload (M)**
Basic dynamic load rating C	**14.7 kN**
Basic static load rating C0	**10 kN**
Limiting speed	**22,000 r/min**
Mass	**0.11 kg**