CASTOMER

DATASHEET

# Spindle bearing 70USS35 A21.I/1QBCL UKF

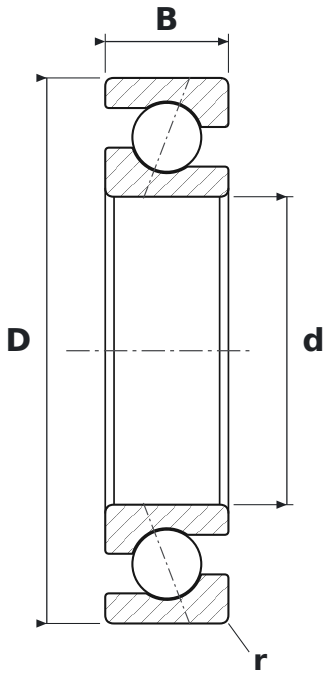


## DIMENSIONS

| | | |
|---|---|---|
| **d** | bore diameter | **35 mm** |
| **D** | outside diameter | **62 mm** |
| **B** | width | **14 mm** |
| **r** | chamfer dimension (min.) | **1 mm** |

## SPECIFICATIONS

| | |
|---|---|
| Manufacturer | **UKF** |
| Manufacturer designation | **70USS35 A21.I/1QBCL** |
| r min – chamfer dimension | **1 mm** |
| Rolling elements | **single-row ball bearing** |
| Contact angle | **21°** |
| Features | **Light preload (L)** |
| Basic dynamic load rating C | **18.1 kN** |
| Basic static load rating C0 | **13.4 kN** |
| Limiting speed | **19,500 r/min** |
| Mass | **0.15 kg** |