CASTOMER

DATASHEET

Spindle bearing 70USS40 A21.0/IS UKF

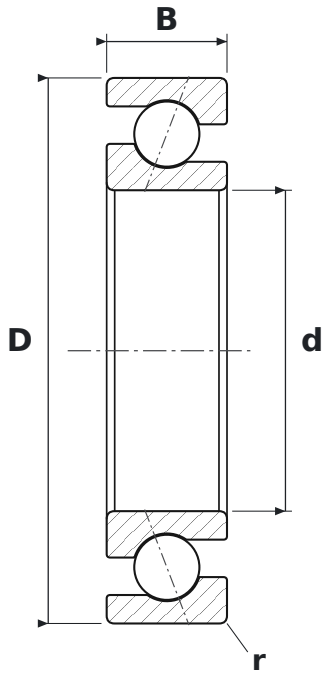

DIMENSIONS

d	bore diameter	**40 mm**
D	outside diameter	**68 mm**
B	width	**15 mm**
r	chamfer dimension (min.)	**1 mm**

SPECIFICATIONS

Manufacturer	**UKF**
Manufacturer designation	**70USS40 A21.0/IS**
r min – chamfer dimension	**1 mm**
Rolling elements	**single-row ball bearing**
Contact angle	**21°**
Features	**Heavy preload (S)**
Basic dynamic load rating C	**18.5 kN**
Basic static load rating C0	**13.7 kN**
Limiting speed	**17,000 r/min**
Mass	**0.18 kg**