CASTOMER

DATASHEET

Spindle bearing 70USS45 A21.I/IS UKF

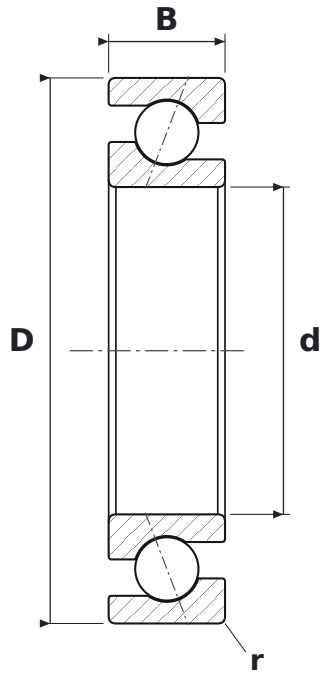

DIMENSIONS

d	bore diameter	**45 mm**
D	outside diameter	**75 mm**
B	width	**16 mm**
r	chamfer dimension (min.)	**1 mm**

SPECIFICATIONS

Manufacturer	**UKF**
Manufacturer designation	**70USS45 A21.I/IS**
r min – chamfer dimension	**1 mm**
Rolling elements	**single-row ball bearing**
Contact angle	**21°**
Features	**Heavy preload (S)**
Basic dynamic load rating C	**25.8 kN**
Basic static load rating C0	**19.3 kN**
Limiting speed	**15,500 r/min**
Mass	**0.24 kg**