Spindle bearing 70USSC25 A21.I/1M UKF

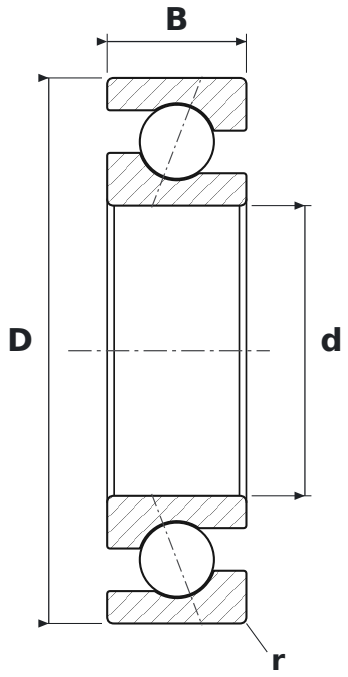

DIMENSIONS

d	bore diameter	**25 mm**
D	outside diameter	**47 mm**
B	width	**12 mm**
r	chamfer dimension (min.)	**0.6 mm**

SPECIFICATIONS

Manufacturer	**UKF**
Manufacturer designation	**70USSC25 A21.I/1M**
r min – chamfer dimension	**0.6 mm**
Rolling elements	**single-row ball bearing**
Contact angle	**21°**
Features	**Medium preload (M)**
Basic dynamic load rating C	**9.38 kN**
Basic static load rating C0	**4.51 kN**
Limiting speed	**36,400 r/min**
Mass	**0.07 kg**