CASTOMER

DATASHEET

Spindle bearing 70USSC30 A21.0/IS UKF

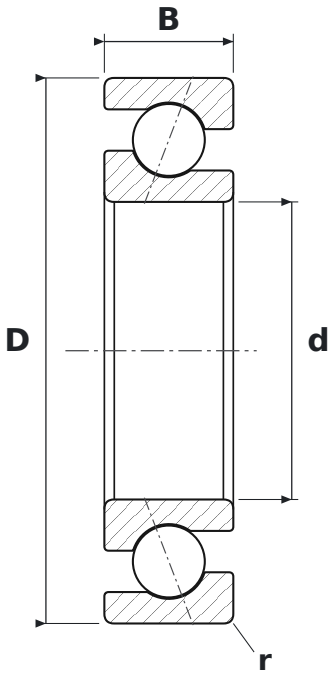

DIMENSIONS

d	bore diameter	**30 mm**
D	outside diameter	**55 mm**
B	width	**13 mm**
r	chamfer dimension (min.)	**1 mm**

SPECIFICATIONS

Manufacturer	**UKF**
Manufacturer designation	**70USSC30 A21.0/IS**
r min – chamfer dimension	**1 mm**
Rolling elements	**single-row ball bearing**
Contact angle	**21°**
Features	**Heavy preload (S)**
Basic dynamic load rating C	**10.29 kN**
Basic static load rating C0	**5.5 kN**
Limiting speed	**30,800 r/min**
Mass	**0.1 kg**