Spindle bearing 70USSC35 A21.0/IS UKF

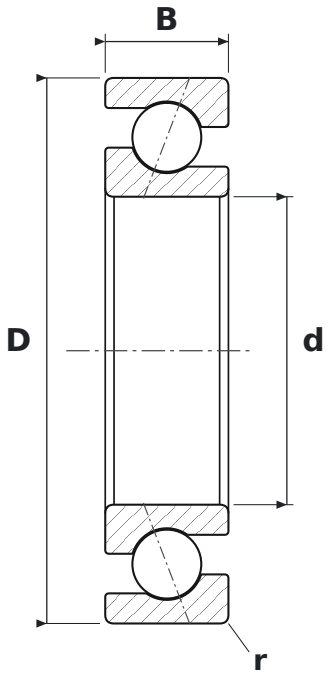

DIMENSIONS

d	bore diameter	**35 mm**
D	outside diameter	**62 mm**
B	width	**14 mm**
r	chamfer dimension (min.)	**1 mm**

SPECIFICATIONS

Manufacturer	**UKF**
Manufacturer designation	**70USSC35 A21.0/IS**
r min – chamfer dimension	**1 mm**
Rolling elements	**single-row ball bearing**
Contact angle	**21°**
Features	**Heavy preload (S)**
Basic dynamic load rating C	**12.88 kN**
Basic static load rating C0	**7.37 kN**
Limiting speed	**27,300 r/min**
Mass	**0.13 kg**