# Spindle bearing 70USSC45 A21.0/IM UKF

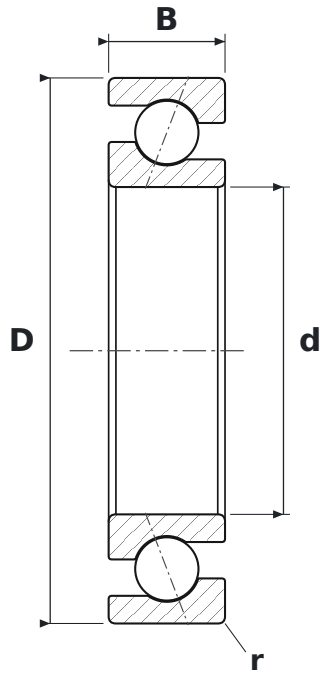


## DIMENSIONS

| | | |
|---|---|---|
| **d** | bore diameter | **45 mm** |
| **D** | outside diameter | **75 mm** |
| **B** | width | **16 mm** |
| **r** | chamfer dimension (min.) | **1 mm** |

## SPECIFICATIONS

| | |
|---|---|
| Manufacturer | **UKF** |
| Manufacturer designation | **70USSC45 A21.0/IM** |
| r min – chamfer dimension | **1 mm** |
| Rolling elements | **single-row ball bearing** |
| Contact angle | **21°** |
| Features | **Medium preload (M)** |
| Basic dynamic load rating C | **18.06 kN** |
| Basic static load rating C0 | **10.615 kN** |
| Limiting speed | **21,700 r/min** |
| Mass | **0.21 kg** |