Spindle bearing K20 A16.I/I UKF

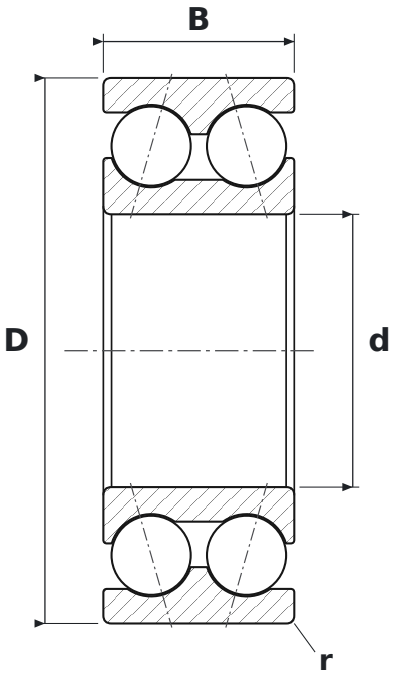

DIMENSIONS

d	bore diameter	**20 mm**
D	outside diameter	**40 mm**
B	width	**14 mm**
r	chamfer dimension (min.)	**0.6 mm**

SPECIFICATIONS

Manufacturer	**UKF**
Manufacturer designation	**K20 A16.I/I**
r min – chamfer dimension	**0.6 mm**
Rolling elements	**double-row ball bearing**
Contact angle	**16°**
Basic dynamic load rating C	**13.3 kN**
Basic static load rating C0	**9.6 kN**
Limiting speed	**7,000 r/min**
Mass	**0.08 kg**