Insert bearing 1035-30 GHLT RHP

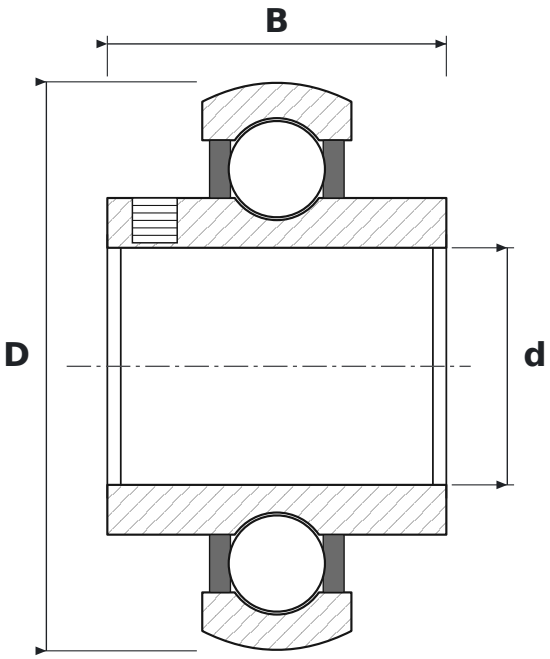

DIMENSIONS

d	bore diameter	**30 mm**
D	outside diameter	**72 mm**
B	inner ring width	**42.9 mm**

SPECIFICATIONS

Manufacturer	**RHP**
Manufacturer designation	**1035-30 GHLT**
Rolling elements	**single-row ball bearing**
Seal	**open – no seals**
Radial internal clearance	**CN – normal**