Insert bearing 1070-2.1/2 G RHP

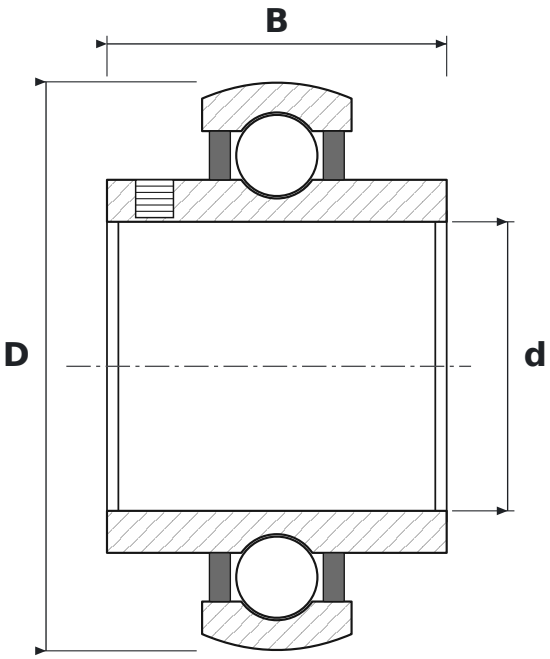

DIMENSIONS

d	bore diameter	**63.5 mm**
D	outside diameter	**125 mm**
B	inner ring width	**74.63 mm**

SPECIFICATIONS

Manufacturer	**RHP**
Manufacturer designation	**1070-2.1/2 G**
Rolling elements	**single-row ball bearing**
Seal	**open – no seals**
Radial internal clearance	**CN – normal**