Insert bearing 1217-17 ECG RHP

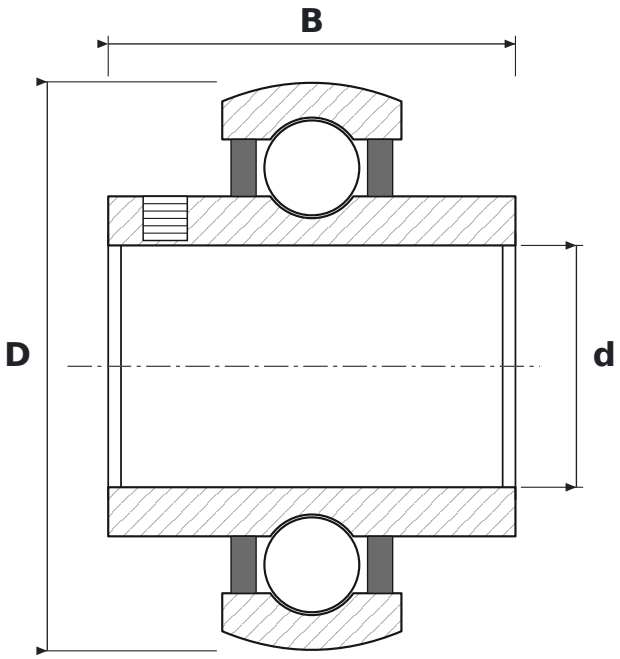

DIMENSIONS

d	bore diameter	**17 mm**
D	outside diameter	**40 mm**
B	inner ring width	**28.63 mm**

SPECIFICATIONS

Manufacturer	**RHP**
Manufacturer designation	**1217-17 ECG**
Rolling elements	**single-row ball bearing**
EC	**reinforced EC design, more rollers (SKF)**
Seal	**open – no seals**
Radial internal clearance	**CN – normal**