# Insert bearing 1230-30 G RHP

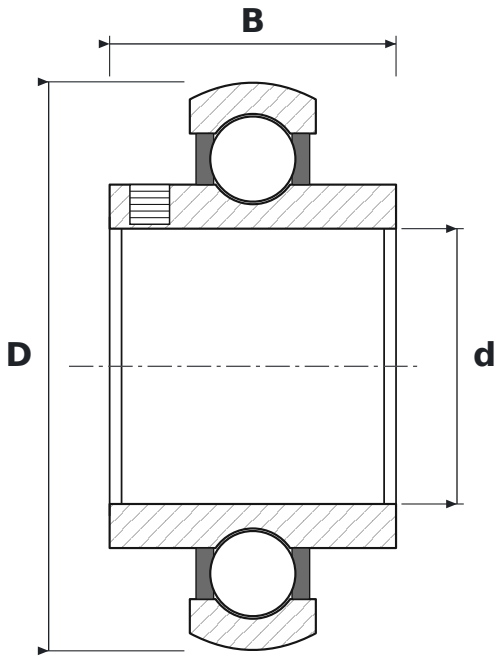


## DIMENSIONS

| | | |
|---|---|---|
| **d** | bore diameter | **30 mm** |
| **D** | outside diameter | **62 mm** |
| **B** | inner ring width | **31.21 mm** |

## SPECIFICATIONS

| | |
|---|---|
| Manufacturer | **RHP** |
| Manufacturer designation | **1230-30 G** |
| Rolling elements | **single-row ball bearing** |
| Seal | **open – no seals** |
| Radial internal clearance | **CN – normal** |