Insert bearing 1250-50 ECG RHP

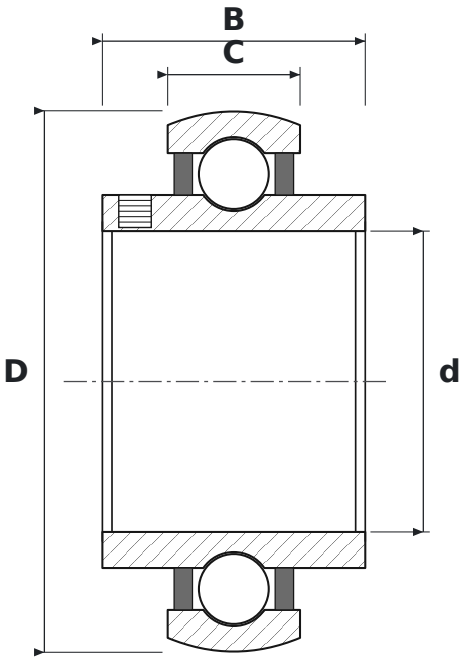

DIMENSIONS

d	bore diameter	**50 mm**
D	outside diameter	**90 mm**
B	inner ring width	**43.7 mm**
C	outer ring width	**22 mm**

SPECIFICATIONS

Manufacturer	**RHP**
Manufacturer designation	**1250-50 ECG**
C – outer ring width	**22 mm**
Rolling elements	**single-row ball bearing**
EC	**reinforced EC design, more rollers (SKF)**
Seal	**open – no seals**
Radial internal clearance	**CN – normal**