Insert bearing 1640-40 G RHP

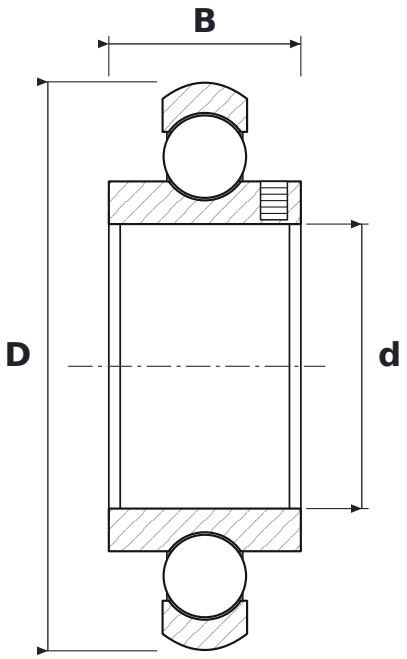

DIMENSIONS

d	bore diameter	**40 mm**
D	outside diameter	**80 mm**
B	inner ring width	**27 mm**

SPECIFICATIONS

Manufacturer	**RHP**
Manufacturer designation	**1640-40 G**
Rolling elements	**single-row ball bearing**
Seal	**open – no seals**
Radial internal clearance	**CN – normal**