Insert bearing 1726207-2RS1 SKF

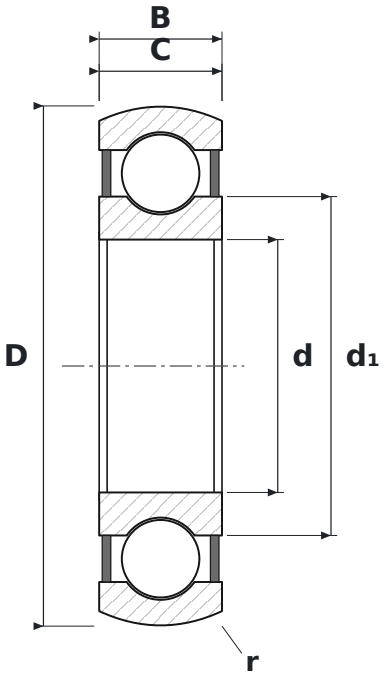

DIMENSIONS

d	bore diameter	**35 mm**
D	outside diameter	**72 mm**
B	inner ring width	**17 mm**
C	outer ring width	**17 mm**
d1	inner ring outside diameter	**46.9 mm**
r	chamfer dimension (min.)	**1.1 mm**

SPECIFICATIONS

Manufacturer	**SKF**
Manufacturer designation	**1726207-2RS1**
B – inner ring width	**17 mm**
C – outer ring width	**17 mm**
r min – chamfer dimension	**1.1 mm**
Rolling elements	**single-row ball bearing**
2RS	**contact rubber seals, both sides**
Radial internal clearance	**CN – normal**