Insert bearing 203 KRR INA

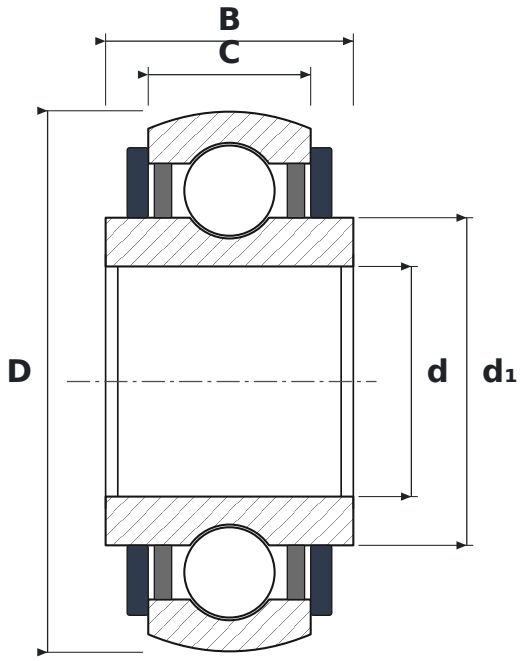

DIMENSIONS

d	bore diameter	**17 mm**
D	outside diameter	**40 mm**
B	inner ring width	**18.3 mm**
C	outer ring width	**12 mm**
d1	inner ring outside diameter	**24.2 mm**

SPECIFICATIONS

Manufacturer	**INA**
Manufacturer designation	**203 KRR**
B – inner ring width	**18.3 mm**
C – outer ring width	**12 mm**
Rolling elements	**single-row ball bearing**
K	**tapered bore, taper 1:12**
Seal	**open – no seals**
Radial internal clearance	**CN – normal**
Basic dynamic load rating C	**10.1 kN**
Basic static load rating C0	**4.75 kN**
Mass	**0.07 kg**