Insert bearing 203 KRRAH02 INA

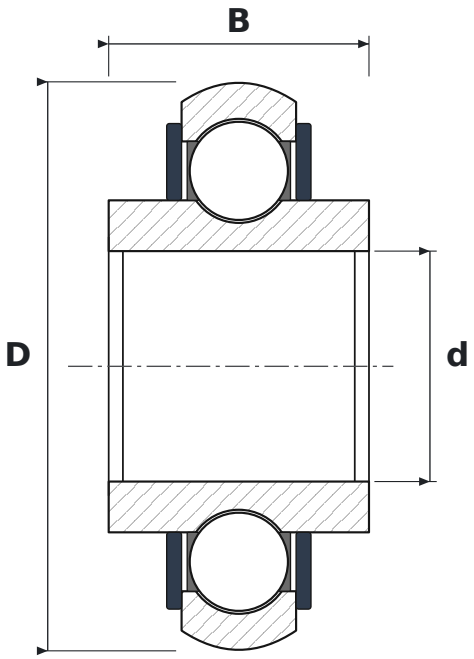

DIMENSIONS

d	bore diameter	**16.2 mm**
D	outside diameter	**40 mm**
B	inner ring width	**18.3 mm**

SPECIFICATIONS

Manufacturer	**INA**
Manufacturer designation	**203 KRRAH02**
Rolling elements	**single-row ball bearing**
K	**tapered bore, taper 1:12**
Seal	**open – no seals**
Radial internal clearance	**CN – normal**