Insert bearing 203 KRRAH05 ZEN

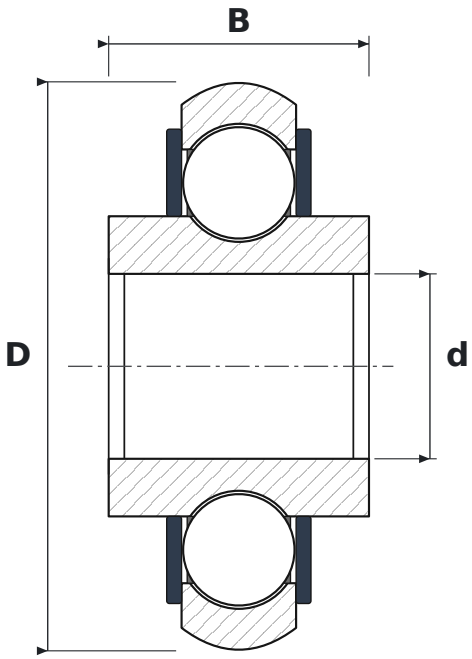

DIMENSIONS

d	bore diameter	**13 mm**
D	outside diameter	**40 mm**
B	inner ring width	**18.3 mm**

SPECIFICATIONS

Manufacturer	**ZEN**
Manufacturer designation	**203 KRRAH05**
Rolling elements	**single-row ball bearing**
K	**tapered bore, taper 1:12**
Seal	**open – no seals**
Radial internal clearance	**CN – normal**