Insert bearing 203 NPPB NKE

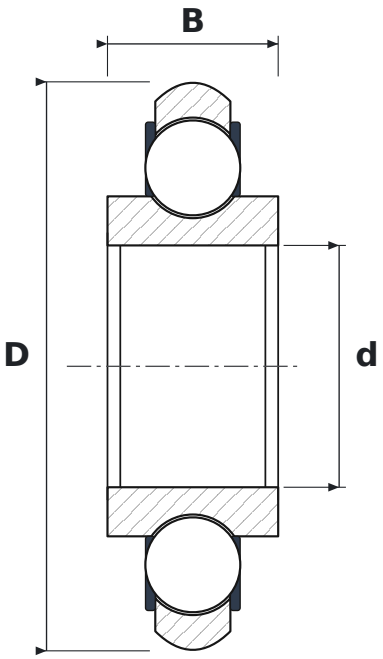

DIMENSIONS

d	bore diameter	**17 mm**
D	outside diameter	**40 mm**
B	inner ring width	**12 mm**

SPECIFICATIONS

Manufacturer	**NKE**
Manufacturer designation	**203 NPPB**
Rolling elements	**single-row ball bearing**
2RS	**contact rubber seals, both sides**
B	**40° contact angle**
Radial internal clearance	**CN – normal**