Insert bearing 212-NPPB NKE

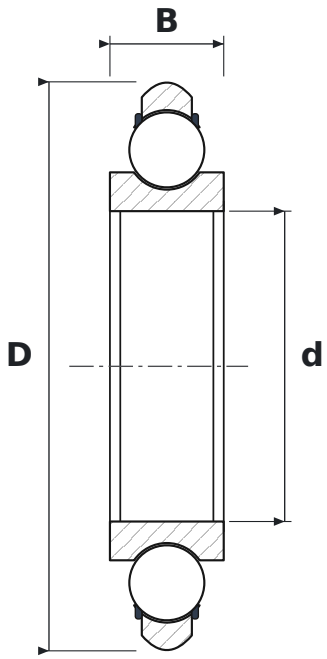

DIMENSIONS

d	bore diameter	**60 mm**
D	outside diameter	**110 mm**
B	inner ring width	**22 mm**

SPECIFICATIONS

Manufacturer	**NKE**
Manufacturer designation	**212-NPPB**
Rolling elements	**single-row ball bearing**
2RS	**contact rubber seals, both sides**
B	**40° contact angle**
Radial internal clearance	**CN – normal**