Insert bearing AS210 D1 NTN

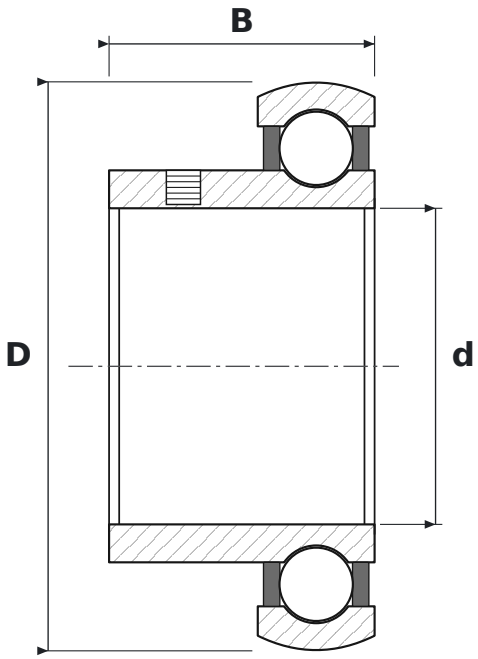

DIMENSIONS

d	bore diameter	**50 mm**
D	outside diameter	**90 mm**
B	inner ring width	**42 mm**

SPECIFICATIONS

Manufacturer	**NTN**
Manufacturer designation	**AS210 D1**
Rolling elements	**single-row ball bearing**
Seal	**open – no seals**
Radial internal clearance	**CN – normal**
Mass	**0.659 kg**