Insert bearing AS210 ZEN

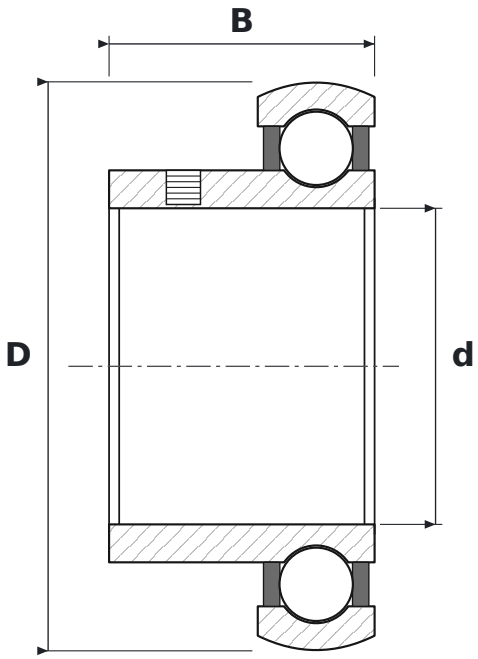

DIMENSIONS

d	bore diameter	**50 mm**
D	outside diameter	**90 mm**
B	inner ring width	**42 mm**

SPECIFICATIONS

Manufacturer	**ZEN**
Manufacturer designation	**AS210**
Rolling elements	**single-row ball bearing**
Seal	**open – no seals**
Radial internal clearance	**CN – normal**