Insert bearing ASS203-N NKE

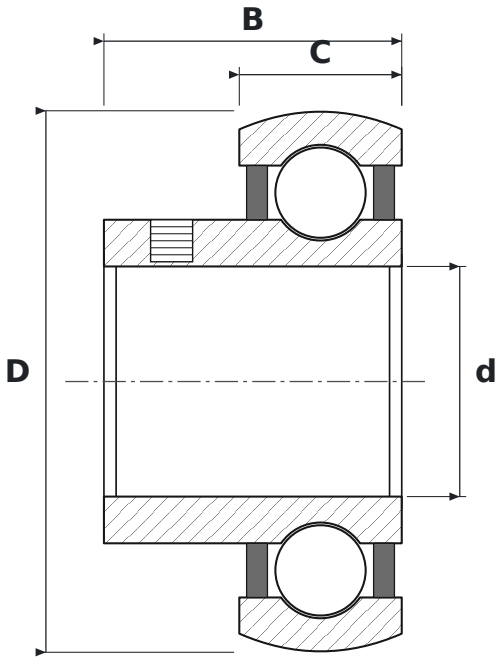

DIMENSIONS

d	bore diameter	**17 mm**
D	outside diameter	**40 mm**
B	inner ring width	**22 mm**
C	outer ring width	**12 mm**

SPECIFICATIONS

Manufacturer	**NKE**
Manufacturer designation	**ASS203-N**
C – outer ring width	**12 mm**
Rolling elements	**single-row ball bearing**
N	**snap ring groove**
Seal	**open – no seals**
Radial internal clearance	**CN – normal**