Insert bearing CUS207 SNR

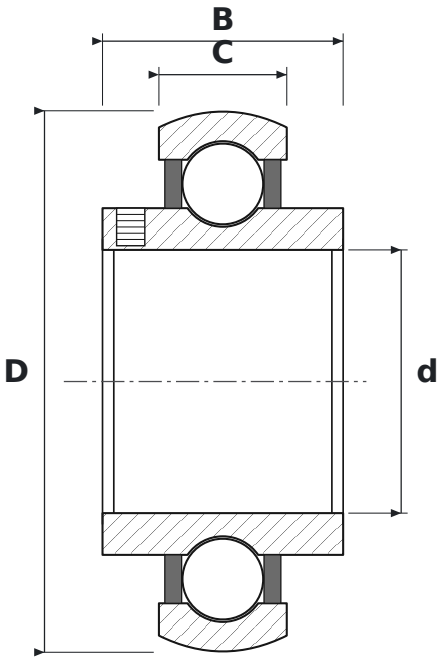

DIMENSIONS

d	bore diameter	**35 mm**
D	outside diameter	**72 mm**
B	inner ring width	**32 mm**
C	outer ring width	**17 mm**

SPECIFICATIONS

Manufacturer	**SNR**
Manufacturer designation	**CUS207**
B – inner ring width	**32 mm**
C – outer ring width	**17 mm**
Rolling elements	**single-row ball bearing**
Seal	**open – no seals**
Radial internal clearance	**CN – normal**
Mass	**0.393 kg**