Insert bearing CUS208 SNR

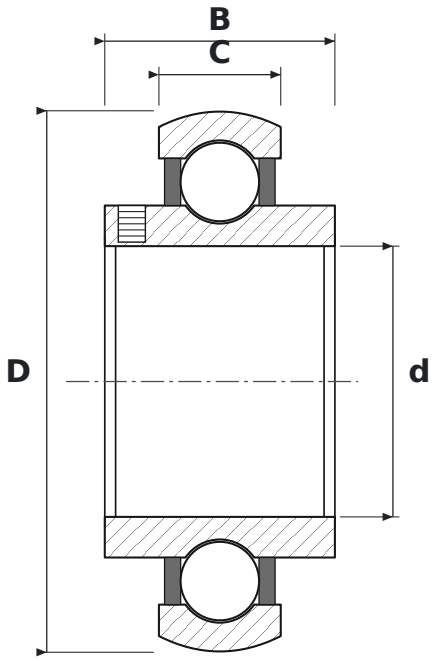

DIMENSIONS

d	bore diameter	**40 mm**
D	outside diameter	**80 mm**
B	inner ring width	**34 mm**
C	outer ring width	**18 mm**

SPECIFICATIONS

Manufacturer	**SNR**
Manufacturer designation	**CUS208**
B – inner ring width	**34 mm**
C – outer ring width	**18 mm**
Rolling elements	**single-row ball bearing**
Seal	**open – no seals**
Radial internal clearance	**CN – normal**
Mass	**0.508 kg**