Insert bearing GAY45 NPPB INA

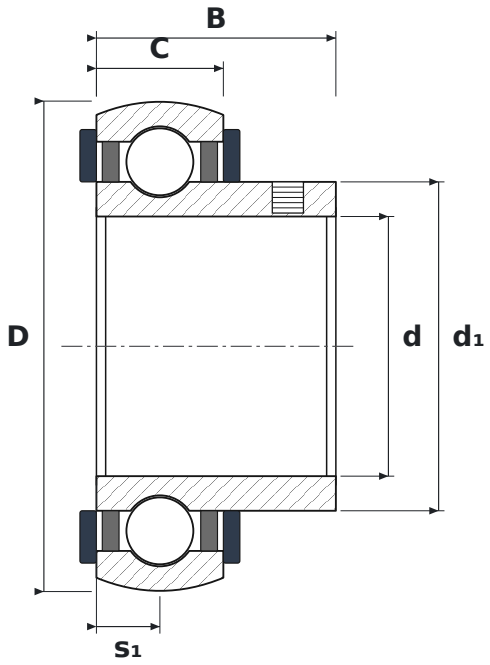

DIMENSIONS

d	bore diameter	**45 mm**
D	outside diameter	**85 mm**
B	inner ring width	**41.5 mm**
C	outer ring width	**22 mm**
s1	inner ring face (locking side) to outer ring centre	**11 mm**
d1	inner ring outside diameter	**57 mm**

SPECIFICATIONS

Manufacturer	**INA**
Manufacturer designation	**GAY45 NPPB**
B – inner ring width	**41.5 mm**
C – outer ring width	**22 mm**
Rolling elements	**single-row ball bearing**
Radial internal clearance	**CN – normal**
Basic dynamic load rating C	**34.5 kN**
Basic static load rating C0	**20.4 kN**
Mass	**0.6 kg**