Insert bearing GAY50 NPPB INA

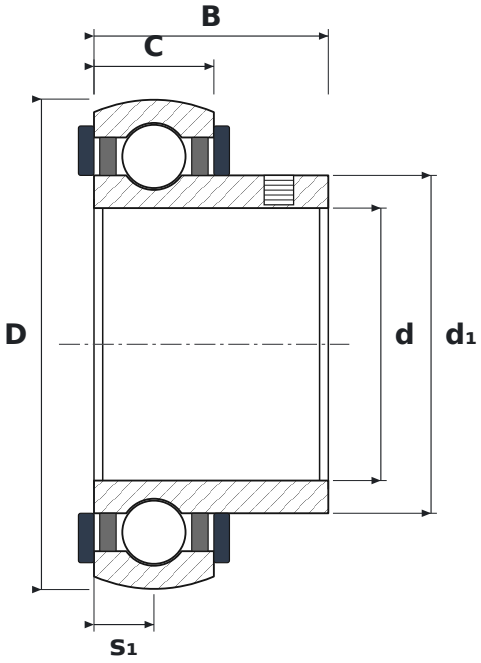

DIMENSIONS

d	bore diameter	**50 mm**
D	outside diameter	**90 mm**
B	inner ring width	**43 mm**
C	outer ring width	**22 mm**
s1	inner ring face (locking side) to outer ring centre	**11 mm**
d1	inner ring outside diameter	**62 mm**

SPECIFICATIONS

Manufacturer	**INA**
Manufacturer designation	**GAY50 NPPB**
B – inner ring width	**43 mm**
C – outer ring width	**22 mm**
Rolling elements	**single-row ball bearing**
Radial internal clearance	**CN – normal**
Basic dynamic load rating C	**37.5 kN**
Basic static load rating C0	**23.2 kN**