Insert bearing GYE35 KRRB INA

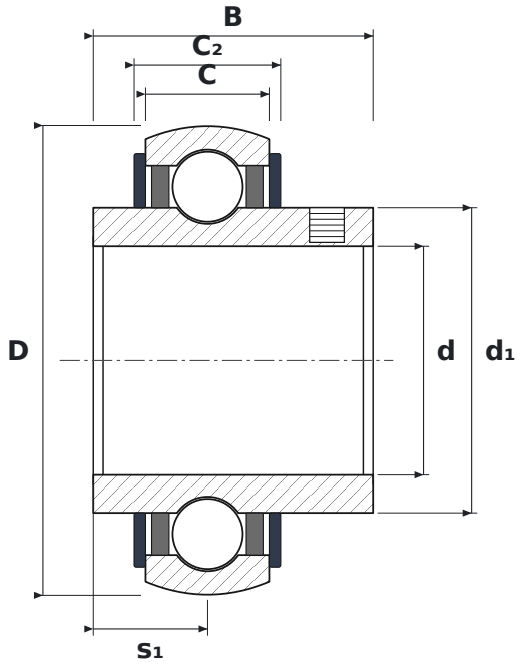

DIMENSIONS

d	bore diameter	**35 mm**
D	outside diameter	**72 mm**
B	inner ring width	**42.9 mm**
C	outer ring width	**19 mm**
C2	outer ring width over flinger discs	**22.5 mm**
s1	inner ring face (locking side) to outer ring centre	**17.5 mm**
d1	inner ring outside diameter	**46.8 mm**

SPECIFICATIONS

Manufacturer	**INA**
Manufacturer designation	**GYE35 KRRB**
B – inner ring width	**42.9 mm**
C – outer ring width	**19 mm**
Rolling elements	**single-row ball bearing**
Radial internal clearance	**CN – normal**
Basic dynamic load rating C	**27.5 kN**
Basic static load rating C0	**15.3 kN**