# Insert bearing M-UC204 D1 NTN

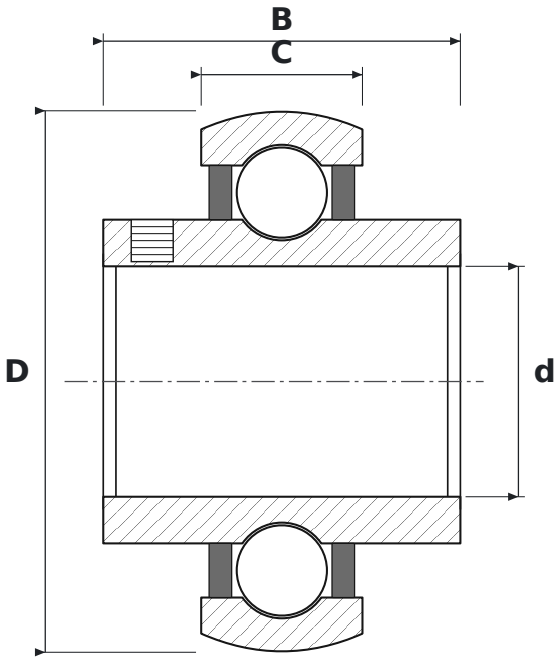


## DIMENSIONS

| | | |
|---|---|---|
| **d** | bore diameter | **20 mm** |
| **D** | outside diameter | **47 mm** |
| **B** | inner ring width | **31 mm** |
| **C** | outer ring width | **14 mm** |

## SPECIFICATIONS

| | |
|---|---|
| Manufacturer | **NTN** |
| Manufacturer designation | **M-UC204 D1** |
| C – outer ring width | **14 mm** |
| Rolling elements | **single-row ball bearing** |
| Radial internal clearance | **CN – normal** |
| Mass | **0.17 kg** |