Insert bearing RAE17 NPPFA106 INA

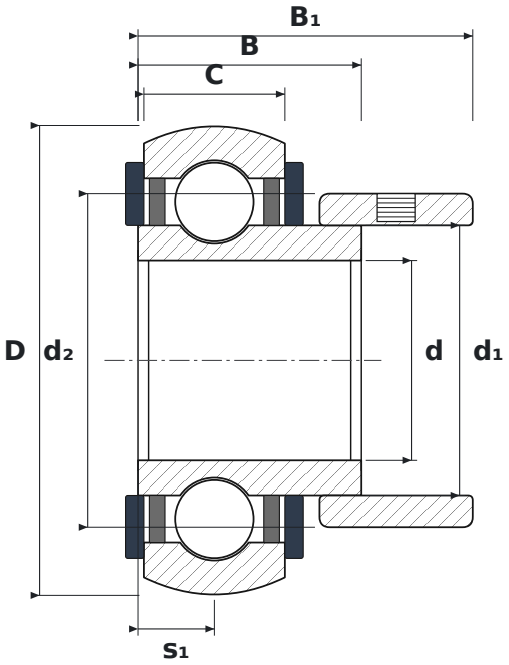

DIMENSIONS

d	bore diameter	**17 mm**
D	outside diameter	**40 mm**
B	inner ring width	**19 mm**
B1	total width including locking collar	**28.6 mm**
C	outer ring width	**12 mm**
s1	inner ring face (locking side) to outer ring centre	**6.5 mm**
d1	inner ring outside diameter	**23 mm**
d2	eccentric locking collar diameter	**28.4 mm**

SPECIFICATIONS

Manufacturer	**INA**
Manufacturer designation	**RAE17 NPPFA106**
B – inner ring width	**19 mm**
C – outer ring width	**12 mm**
Rolling elements	**single-row ball bearing**
Radial internal clearance	**CN – normal**
Basic dynamic load rating C	**10.1 kN**
Basic static load rating C0	**4.75 kN**