# Insert bearing SAA203 FYH

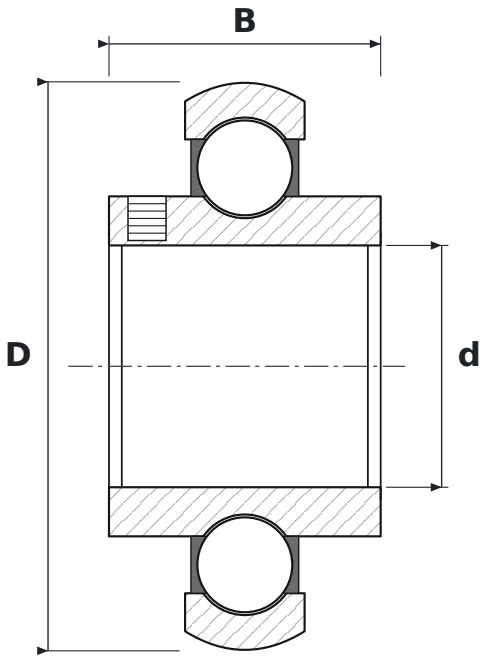


## DIMENSIONS

| | | |
|---|---|---|
| **d** | bore diameter | **17 mm** |
| **D** | outside diameter | **40 mm** |
| **B** | inner ring width | **19.1 mm** |

## SPECIFICATIONS

| | |
|---|---|
| Manufacturer | **FYH** |
| Manufacturer designation | **SAA203** |
| Rolling elements | **single-row ball bearing** |
| Seal | **open – no seals** |
| Radial internal clearance | **CN – normal** |