Insert bearing SC203 FYH

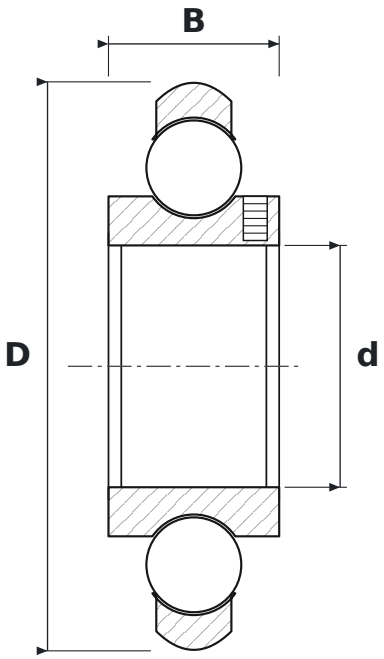

DIMENSIONS

d	bore diameter	**17 mm**
D	outside diameter	**40 mm**
B	inner ring width	**12 mm**

SPECIFICATIONS

Manufacturer	**FYH**
Manufacturer designation	**SC203**
Rolling elements	**single-row ball bearing**
Seal	**open – no seals**
Radial internal clearance	**CN – normal**