Insert bearing SC207 NKE

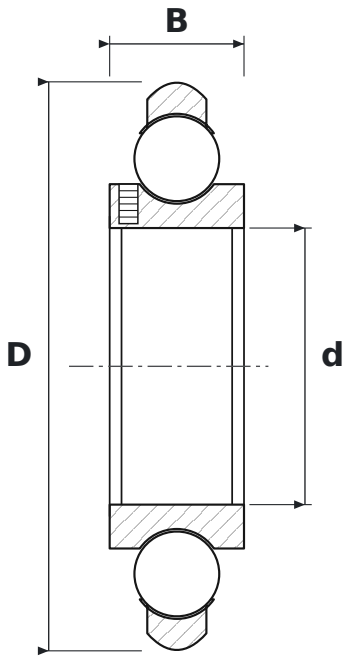

DIMENSIONS

d	bore diameter	**35 mm**
D	outside diameter	**72 mm**
B	inner ring width	**17 mm**

SPECIFICATIONS

Manufacturer	**NKE**
Manufacturer designation	**SC207**
Rolling elements	**single-row ball bearing**
Seal	**open – no seals**
Radial internal clearance	**CN – normal**