Insert bearing UC204 KOYO

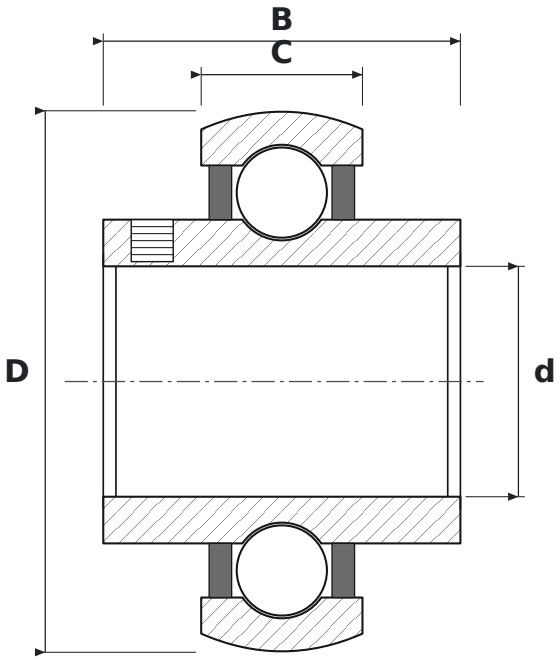

DIMENSIONS

d	bore diameter	**20 mm**
D	outside diameter	**47 mm**
B	inner ring width	**31 mm**
C	outer ring width	**14 mm**

SPECIFICATIONS

Manufacturer	**KOYO**
Manufacturer designation	**UC204**
C – outer ring width	**14 mm**
Rolling elements	**single-row ball bearing**
Seal	**open – no seals**
Radial internal clearance	**CN – normal**