Insert bearing UC207 KOYO

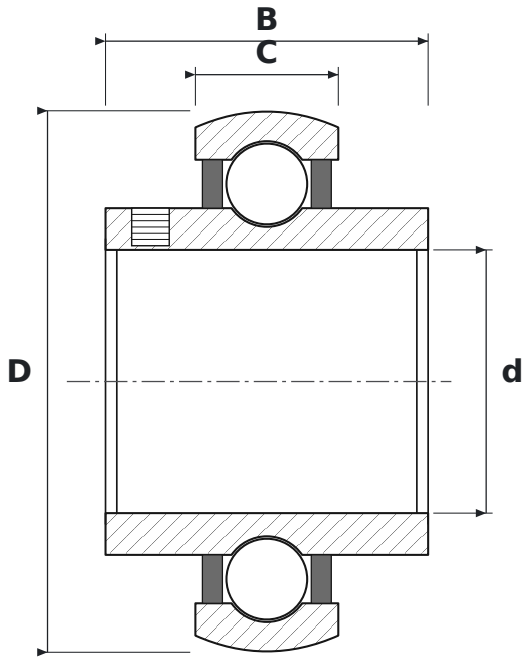

DIMENSIONS

d	bore diameter	**35 mm**
D	outside diameter	**72 mm**
B	inner ring width	**42.9 mm**
C	outer ring width	**19 mm**

SPECIFICATIONS

Manufacturer	**KOYO**
Manufacturer designation	**UC207**
C – outer ring width	**19 mm**
Rolling elements	**single-row ball bearing**
Seal	**open – no seals**
Radial internal clearance	**CN – normal**