Insert bearing UC209 FYH

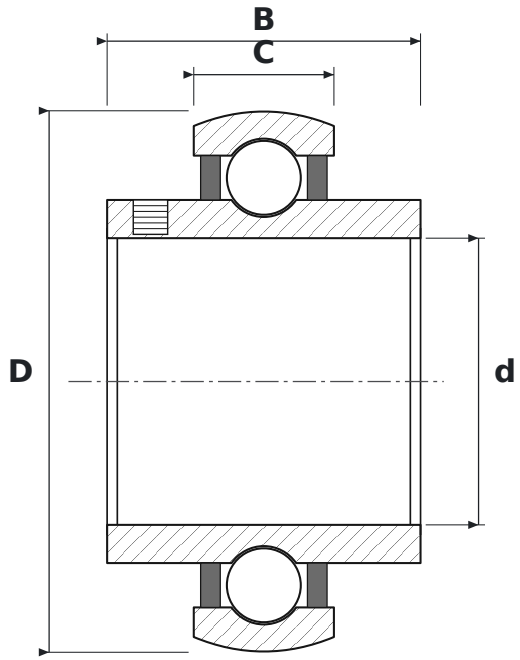

DIMENSIONS

d	bore diameter	**45 mm**
D	outside diameter	**85 mm**
B	inner ring width	**49.2 mm**
C	outer ring width	**22 mm**

SPECIFICATIONS

Manufacturer	**FYH**
Manufacturer designation	**UC209**
C – outer ring width	**22 mm**
Rolling elements	**single-row ball bearing**
Seal	**open – no seals**
Radial internal clearance	**CN – normal**